SC DEPARTMENT OF JUVENILE JUSTICE

COASTAL EVALUATION CENTER

AIR HANDLER REPLACEMENT

STATE PROJECT NO. N12-9640-AT-A

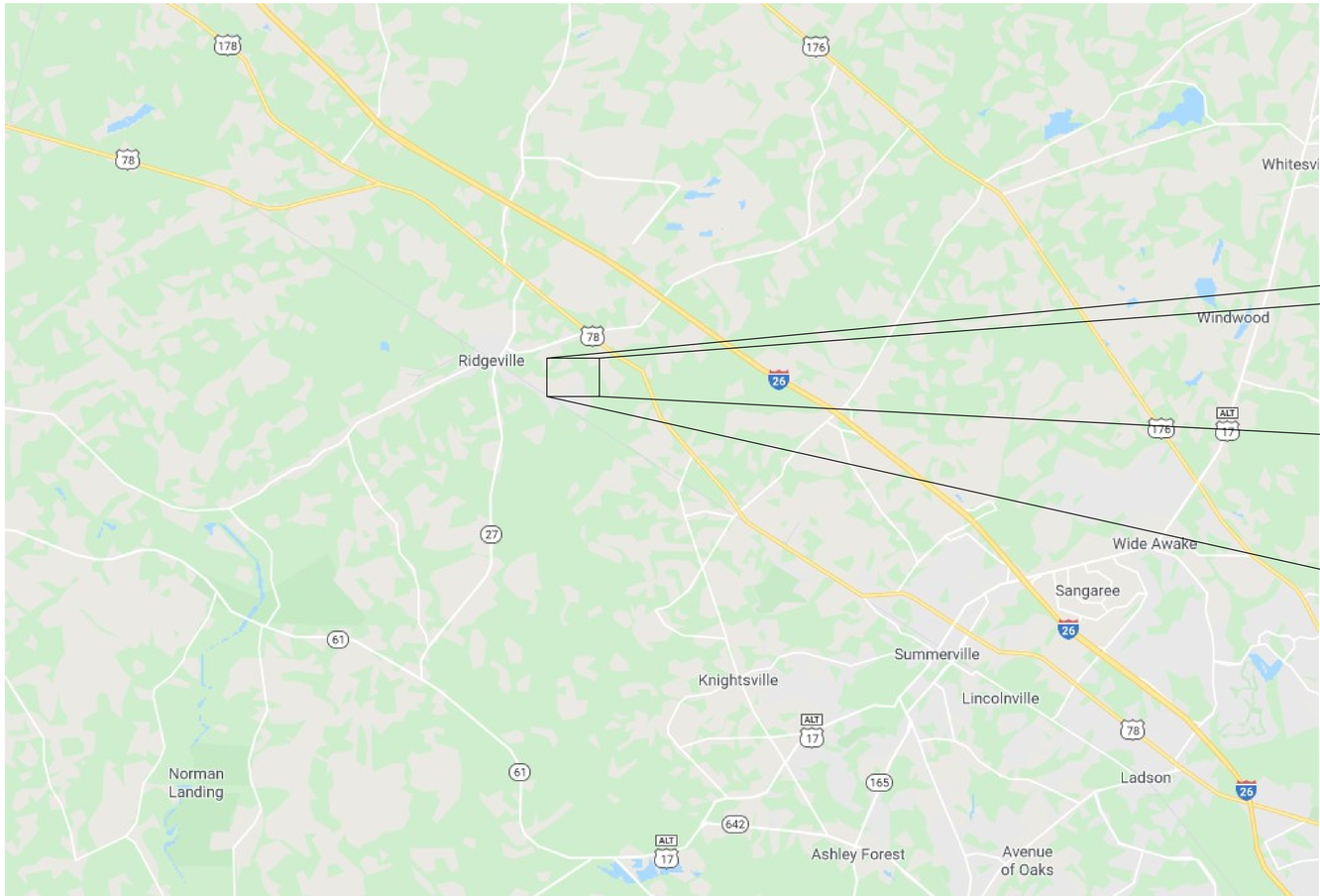

IMAGE OF MAP PROVIDED BY GOOGLEMAPS.COM

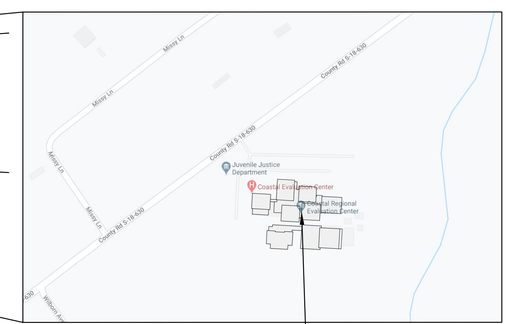

COASTAL REGIONAL
EVALUATION CENTER
331 Campbell Thickett Rd.
Ridgeville, South Carolina 29472

SITE LOCATION
NO SCALE

CODE REVIEW INFORMATION

PROJECT DESIGNED IS ACCORDANCE WITH:

1. International Building Code - 2021 Edition.
2. International Plumbing Code - 2021 Edition.
3. International Mechanical Code - 2021 Edition.
4. National Electric Code - 2020 Edition.
5. Seismic Design Category D

INDEX OF DRAWINGS

C101	COVER SHEET
M001	HVAC DEMOLITION FLOOR PLAN
M101	HVAC RENOVATION FLOOR PLAN
M201	HVAC SYMBOLS, NOTES & SCHEDULES
M401	HVAC DETAILS
M402	HVAC DETAILS
E001	ELECTRICAL NOTES & LEGENDS
E101	ELECTRICAL DEMOLITION FLOOR PLANS
E102	ELECTRICAL RENOVATION FLOOR PLANS
E201	ELECTRICAL SCHEDULES

SPECIAL NOTE:
IT IS HIGHLY RECOMMENDED THAT THE CONTRACTOR VISIT THE PROJECT SITE PRIOR TO SUBMITTING A BID AND THOROUGHLY FAMILIARIZE HIMSELF WITH ALL EXIST CONDITIONS RELATING TO THIS PROJECT. SUBMISSION OF A BID WILL BE CONSIDERED AS EVIDENCE THAT THE CONTRACTOR HAS VISITED THE SITE OF WORK.

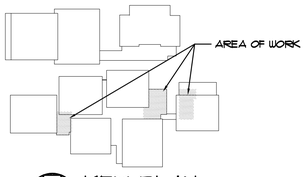

KEY PLAN
NTS

ISSUE NO.	REMARKS:	BY	APPROV'D	DATE:
–	OWNER REVIEW	JJV	JJV	09.04.26
–	OSE REVIEW	JJV	JJV	09.14.26

South Carolina DEPARTMENT OF JUVENILE JUSTICE

A/E SEAL: SOUTH CAROLINA PROFESSIONAL ENGINEER No. 32935 09/14/26 JUSTIN J. VARCO

FIRM SEAL: SOUTH CAROLINA MECHANICAL DESIGN, INC. Columbia, SC No. C00098 CERTIFICATE OF AUTHORIZATION

MECHANICAL DESIGN INC.
4403 Broad River Road
Columbia, S.C. 29210
(803) 731-9834
(803) 731-9837 FAX
CONTACT: JUSTIN VARCO
COMM. NO. 264171.A

Project: SCDJJ - CEC AIR HANDLER REPLACEMENT
RIDGEVILLE, SOUTH CAROLINA
N12-9640-AT-A

Sheet Title: COVER SHEET

SHEET NO. C101

THIS DRAWING IS THE PROPERTY OF MECHANICAL DESIGN, INC. AND SUBJECT TO RETURN UPON REQUEST. IT IS NOT TO BE COPIED OR REPRODUCED, NOR IS IT TO BE USED FOR ANY PURPOSE OTHER THAN THAT FOR WHICH IT WAS FURNISHED, WITHOUT THE WRITTEN CONSENT OF MECHANICAL DESIGN, INC.

THIS DRAWING IS THE PROPERTY OF MECHANICAL DESIGN, INC. AND SUBJECT TO RETURN UPON REQUEST. IT IS NOT TO BE COPIED OR REPRODUCED, NOR IS IT TO BE USED FOR ANY PURPOSE OTHER THAN THAT FOR WHICH IT WAS FURNISHED, WITHOUT THE WRITTEN CONSENT OF MECHANICAL DESIGN, INC.

TYPICAL DEMOLITION NOTES

D1 ALL HVAC MATERIAL AND EQUIPMENT MADE OBSOLETE BY THE SCOPE OF THIS WORK SHALL BE REMOVED FROM THE WORK SPACE. EQUIPMENT AND MATERIAL OF VALUE (REFRIGERANT, CONTROL VALVES, CONTROL COMPONENTS, ETC.) SHALL BE TURNED OVER TO THE OWNER AND DELIVERED UNDAMAGED TO THE LOCATION ON SITE WHERE DIRECTED BY THE OWNER. ALL OTHER DEMOLISHED ITEMS SHALL BECOME THE PROPERTY OF THE CONTRACTOR AND BE REMOVED FROM THE SITE.

D2 THE CONTRACTOR SHALL REMOVE AND RECOVER ALL REFRIGERANT FROM THE EXISTING AIR HANDLER PRIOR TO THE REMOVAL OF THE REFRIGERANT SYSTEM. THE REMOVAL OF REFRIGERANT SHALL MAXIMIZE RECOVERY AND RECYCLING OF OZONE DEPLETING SUBSTANCES (BOTH CLOROFLOROCARBONS (CFCs) AND HYDROCHOROFLOROCARBONS HCFCs) AND THEIR BLENDS) DURING DISPOSAL OF ALL AIR CONDITIONING AND REFRIGERANT EQUIPMENT.

D3 REMOVE EXISTING MULTI ZONE AIR HANDLERS COMPLETE, INCLUDING DUCTWORK, CONTROLS, AND DAMPER SYSTEM. REMOVE ALL DUCTWORK ASSOCIATED WITH UNITS WITHIN THE CONFINES OF THE MECHANICAL ROOM.

D4 REMOVE CHILLED WATER AND HOT WATER PIPING AS HATCHED ON THE DEMOLITION FLOOR PLANS. PROVIDE NEW VALVES AND PIPING TO EXTEND TO NEW BLOWER COILS. SEE RENOVATION FLOOR PLANS.

D5 REMOVE AND REPLACE EXISTING CHILLED WATER PUMPS AND MOTOR STARTERS. PROVIDE NEW PUMPS AND VFDS. REMOVE EXISTING AIR SEPARATOR AND EXPANSION TANK. PROVIDE NEW PER RENOVATION PLANS AND DETAILS.

D6 EXISTING EXHAUST FAN TO REMAIN IN PLACE.

D7 EXISTING DUCT SIZES ARE LISTED FOR REFERENCE ONLY. VERIFY ACTUAL FIELD INSTALLED DUCT SIZES PRIOR TO FABRICATION OF DUCT CONNECTIONS.

D8 CAP BOTTOM OF RELIEF AIR HOOD WITH AN INSULATED SHEET METAL PANEL

RATED WALL INDICATIONS

- 1 HOUR WALL
- 2 HOUR WALL
- 3 HOUR WALL
- SMOKE-RATED WALLS SEALED TO DECK

NOTES:

1. VERIFY RATED FLOOR AND WALL ASSEMBLY TYPES AND LOCATIONS WITH ARCHITECTURAL FLOOR PLANS.
2. SEAL ALL DUCT AND PIPE PENETRATIONS THROUGH FLOORS AND SMOKE RATED WALL ASSEMBLIES WITH ANGLE AND CAULK.
3. PROVIDE UL RATED ASSEMBLIES ON ALL DUCT AND PIPE PENETRATIONS THROUGH RATED WALL AND FLOOR ASSEMBLIES.

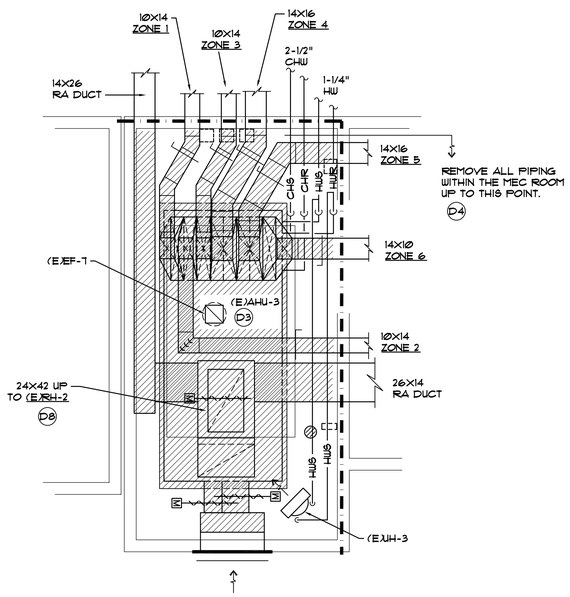

HVAC DEMO FLOOR PLAN - MECH B135

SCALE: 1/4" = 1'-0"

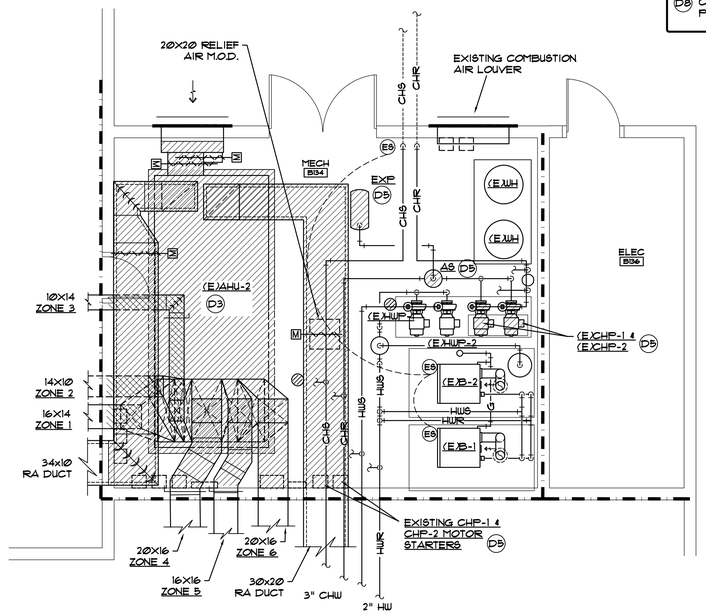

HVAC DEMO FLOOR PLAN - MECH B134

SCALE: 1/4" = 1'-0"

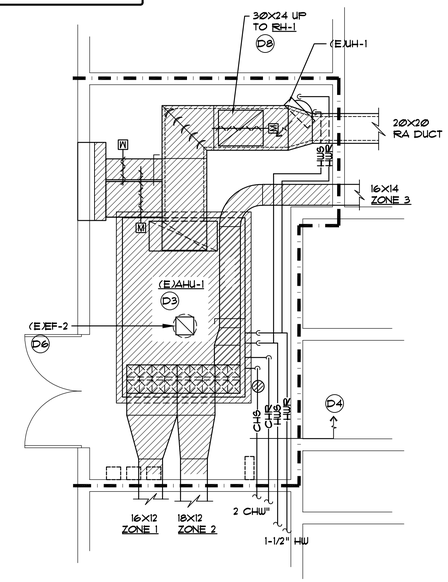

HVAC DEMO FLOOR PLAN - MECH A120

SCALE: 1/4" = 1'-0"

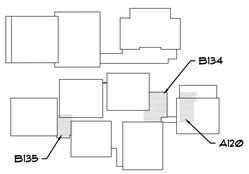

KEY PLAN

NTS

ISSUE NO.	REMARKS:	BY	APPROV'D	DATE:
–	OWNER REVIEW	JJV	JJV	09.04.26
–	OSE REVIEW	JJV	JJV	09.14.26

South Carolina DEPARTMENT OF JUVENILE JUSTICE

A/E SEAL: SOUTH CAROLINA PROFESSIONAL ENGINEER No. 32435 09/14/26

FIRM SEAL: SOUTH CAROLINA MECHANICAL DESIGN, INC. Columbia, SC No. C00096 CERTIFICATE OF AUTHORIZATION

MECHANICAL DESIGN INC.
4403 Broad River Road
Columbia, SC 29210
(803) 731-9834
(803) 731-9837 FAX
CONTACT: JUSTIN VARCO
COMM. NO. 264171.A

Project: SCDJJ - CEC AIR HANDLER REPLACEMENT
RIDGEVILLE, SOUTH CAROLINA
N12-9640-AT-A

Sheet Title: HVAC DEMOLITION FLOOR PLANS

SHEET NO. M001

THIS DRAWING IS THE PROPERTY OF MECHANICAL DESIGN, INC. AND SUBJECT TO RETURN UPON REQUEST. IT IS NOT TO BE COPIED OR REPRODUCED, NOR IS IT TO BE USED FOR ANY PURPOSE OTHER THAN THAT FOR WHICH IT WAS FURNISHED, WITHOUT THE WRITTEN CONSENT OF MECHANICAL DESIGN, INC.

RATED WALL INDICATIONS

- 1 HOUR WALL
- 2 HOUR WALL
- 3 HOUR WALL
- SMOKE-RATED WALLS SEALED TO DECK

NOTES:

1. VERIFY RATED FLOOR AND WALL ASSEMBLY TYPES AND LOCATIONS WITH ARCHITECTURAL FLOOR PLANS.
2. SEAL ALL DUCT AND PIPE PENETRATIONS THROUGH FLOORS AND SMOKE RATED WALL ASSEMBLIES WITH ANGLE AND CAULK.
3. PROVIDE UL RATED ASSEMBLIES ON ALL DUCT AND PIPE PENETRATIONS THROUGH RATED WALL AND FLOOR ASSEMBLIES.

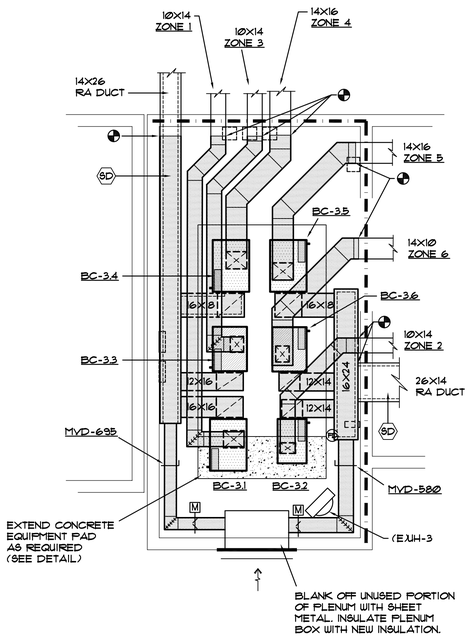

HVAC RENO FLOOR PLAN - MECH B135

SCALE: 1/4" = 1'-0"

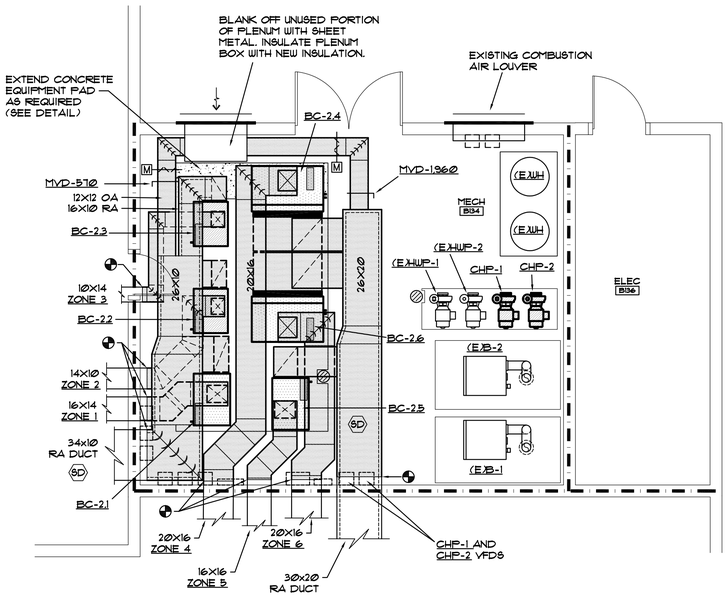

HVAC RENO FLOOR PLAN - MECH B134

SCALE: 1/4" = 1'-0"

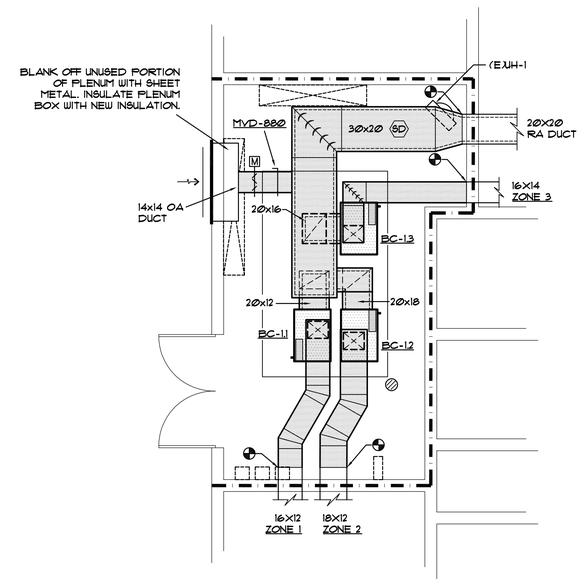

HVAC RENO FLOOR PLAN - MECH A120

SCALE: 1/4" = 1'-0"

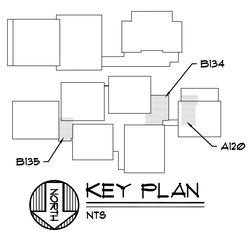

KEY PLAN

NTS

ISSUE: NO.	REMARKS:	BY	APPROV'D	DATE:
–	OWNER REVIEW	JJV	JJV	09.04.26
–	OSE REVIEW	JJV	JJV	09.14.26

South Carolina DEPARTMENT OF JUVENILE JUSTICE

A/E SEAL: SOUTH CAROLINA PROFESSIONAL ENGINEER JUSTIN J. VARCO No. 32435 09/14/26

FIRM SEAL: SOUTH CAROLINA MECHANICAL DESIGN, INC. Columbia, SC No. C00096 CERTIFICATE OF AUTHORIZATION

MECHANICAL DESIGN INC.
4403 Broad River Road
Columbia, SC 29210
(803) 731-9834
(803) 731-9837 FAX
CONTACT: JUSTIN VARCO
COMM. NO. 264171.A

Project: SCDJJ - CEC AIR HANDLER REPLACEMENT
RIDGEVILLE, SOUTH CAROLINA
N12-9640-AT-A

Sheet Title: HVAC RENOVATION FLOOR PLAN

SHEET NO. M101

THIS DRAWING IS THE PROPERTY OF MECHANICAL DESIGN, INC. AND SUBJECT TO RETURN UPON REQUEST. IT IS NOT TO BE COPIED OR REPRODUCED, NOR IS IT TO BE USED FOR ANY PURPOSE OTHER THAN THAT FOR WHICH IT WAS FURNISHED, WITHOUT THE WRITTEN CONSENT OF MECHANICAL DESIGN, INC.

RATED WALL INDICATIONS

- 1 HOUR WALL
- 2 HOUR WALL
- 3 HOUR WALL
- SMOKE-RATED WALLS SEALED TO DECK

NOTES:

1. VERIFY RATED FLOOR AND WALL ASSEMBLY TYPES AND LOCATIONS WITH ARCHITECTURAL FLOOR PLANS.
2. SEAL ALL DUCT AND PIPE PENETRATIONS THROUGH FLOORS AND SMOKE RATED WALL ASSEMBLIES WITH ANGLE AND CAULK.
3. PROVIDE UL RATED ASSEMBLIES ON ALL DUCT AND PIPE PENETRATIONS THROUGH RATED WALL AND FLOOR ASSEMBLIES.

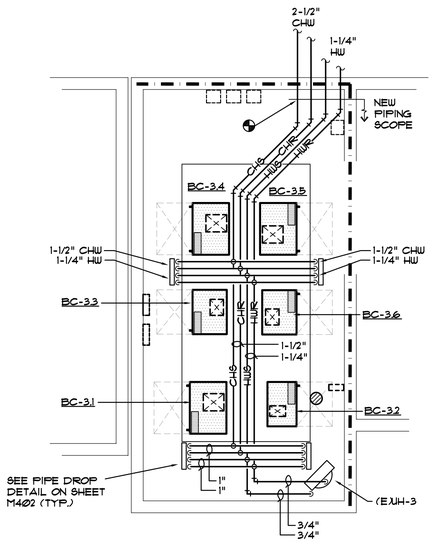

HVAC RENO FLOOR PLAN - MECH B135

SCALE: 1/4" = 1'-0"

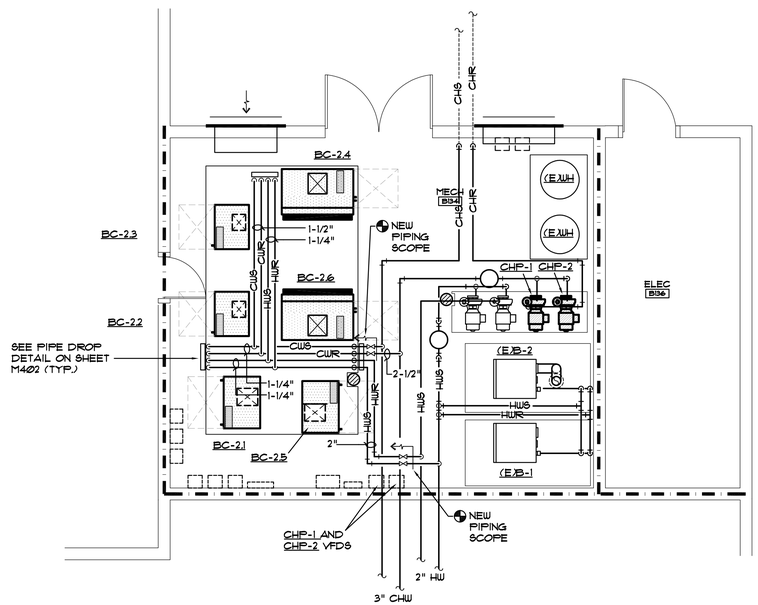

HVAC RENO FLOOR PLAN - MECH B134

SCALE: 1/4" = 1'-0"

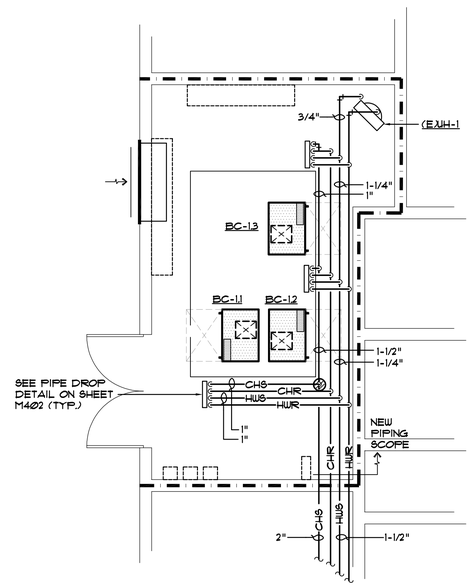

HVAC RENO FLOOR PLAN - MECH A120

SCALE: 1/4" = 1'-0"

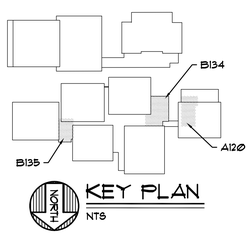

KEY PLAN

NTS

ISSUE NO.	REMARKS:	BY	APPROV'D	DATE:
–	OWNER REVIEW	JJV	JJV	09.04.26
–	OSE REVIEW	JJV	JJV	09.14.26

South Carolina DEPARTMENT OF JUVENILE JUSTICE

A/E SEAL: SOUTH CAROLINA PROFESSIONAL ENGINEER LICENSE No. 32435 09/14/26 JUSTIN J. VARCO

FIRM SEAL: SOUTH CAROLINA MECHANICAL DESIGN, INC. Columbia, SC No. C00096 CERTIFICATE OF AUTHORIZATION

MECHANICAL DESIGN INC.
4403 Broad River Road
Columbia, SC 29210
(803) 731-9834
(803) 731-9837 FAX
CONTACT: JUSTIN VARCO
COMM. NO. 264171.A

Project: SCDJJ - CEC AIR HANDLER REPLACEMENT
RIDGEVILLE, SOUTH CAROLINA
N12-9640-AT-A

Sheet Title: HVAC SYMBOLS, NOTES & SCHEDULES

SHEET NO. M201

THIS DRAWING IS THE PROPERTY OF MECHANICAL DESIGN, INC. AND SUBJECT TO RETURN UPON REQUEST. IT IS NOT TO BE COPIED OR REPRODUCED, NOR IS IT TO BE USED FOR ANY PURPOSE OTHER THAN THAT FOR WHICH IT WAS FURNISHED, WITHOUT THE WRITTEN CONSENT OF MECHANICAL DESIGN, INC.

BLOWER COIL UNIT SCHEDULE (1)(5)

MARK	TRANE MODEL NUMBER (2)	SUPPLY FAN MODULE			MIN. O.A. CFM	COOLING COIL										HOT WATER COIL						
		CFM	E.S.P.	FAN* H.P.		TOTAL MBH	SENS. MBH	ENT. AIR °FDB	ENT. AIR °FWB	LVG. AIR °FDB	LVG. AIR °FWB	EWT (°F)	LWT (°F)	GPM	MAX WATER PD	ENT AIR	MIN. LVG AIR	CAPACITY MBH	FLUID GPM	EWT	LWT	MAX WATER PD
MECH RM. A120																						
BC-1.1	BCVE-048	1,200	0.5"	0.5	240	57.0	41.3	84	68	52.4	52.3	44	58	8.0	10'	55	95	63.2	6.3	140	120	5'
BC-1.2	BCVE-048	1,600	0.5"	1.0	320	71.4	52.9	84	68	53.5	53.3	44	58	10.2	10'	55	95	76.0	7.6	140	120	5'
BC-1.3	BCVE-048	1,600	0.5"	1.0	320	71.4	52.9	84	68	53.5	53.3	44	58	10.2	10'	55	95	76.0	7.6	140	120	5'
MECH RM. B134																						
BC-2.1	BCVE-048	1,350	0.5"	1.0	270	62.1	41.3	84	68	52.8	52.6	44	58	8.8	10'	55	95	67.8	6.8	140	120	5'
BC-2.2	BCVE-036	800	0.5"	0.5	160	35.8	26.7	84	68	53.5	53.4	44	58	5.1	10'	55	95	41.8	4.2	140	120	5'
BC-2.3	BCVE-036	700	0.5"	0.5	140	31.9	23.5	84	68	53.5	53.2	44	58	4.5	10'	55	95	38.0	3.8	140	120	5'
BC-2.4	BCVE-090	2,465	0.5"	1.5	500	105.2	80.2	84	68	54.4	54.3	44	58	15.0	10'	55	95	129.6	13.0	140	120	5'
BC-2.5	BCVE-048	1,700	0.5"	1.0	340	75.3	56.1	84	68	53.8	53.6	44	58	7.5	10'	55	95	79.4	7.9	140	120	5'
BC-2.6	BCVE-090	2,745	0.5"	1.5	550	115.2	88.4	84	68	54.7	54.5	44	58	16.4	10'	55	95	138.8	14.0	140	120	5'
MECH RM. B135																						
BC-3.1	BCVE-048	1,200	0.5"	0.5	240	57.0	41.3	84	68	52.4	52.3	44	58	8.0	10'	55	95	63.2	6.3	140	120	5'
BC-3.2	BCVE-036	660	0.5"	0.5	130	30.2	22.3	84	68	53.2	53.1	44	58	4.3	10'	55	95	36.3	3.6	140	120	5'
BC-3.3	BCVE-036	775	0.5"	0.5	155	35.0	25.9	84	68	53.6	53.3	44	58	5.0	10'	55	95	41.0	4.1	140	120	5'
BC-3.4	BCVE-048	1,500	0.5"	1.0	300	60.7	50.7	84	68	53.3	53.1	44	58	9.8	10'	55	95	73.7	7.4	140	120	5'
BC-3.5	BCVE-048	1,460	0.5"	1.0	300	67.3	49.5	84	68	53.1	53.0	44	58	9.6	10'	55	95	72.4	7.3	140	120	5'
BC-3.6	BCVE-036	730	0.5"	0.5	150	33.2	24.5	84	68	53.5	53.2	44	58	4.7	10'	55	95	39.3	4.0	140	120	5'

(1) AIR HANDLING UNIT TO MATCH AVAILABLE ELECTRICAL SERVICE, SEE ELECTRICAL.

(2) AS MANUFACTURED BY TRANE OR BY CARRIER, DAIKIN, JCI, OR ACCEPTED EQUAL.

(3) PROVIDE BLOWER COIL WITH FLAT FILTER FRAME, CHILLED WATER COOLING COIL, HOT WATER HEATING COIL, ECM FAN MODULE. DISCHARGE SHALL BE VERTICAL WITH COMPACT FRAME AND FACTORY PAINTED. PLENUM BOX (SEE DETAIL ON SHEET M401).

(4) MAXIMUM BRAKE H.P. SHALL NOT EXCEED 90% OF FAN H.P. LISTED.

(5) PROVIDE UNIT WITH NEEDLE POINT BI-POLAR IONIZATION GENERATORS BY PHENOMENAL AIR OR GLOBAL PLASMA SOLUTIONS. ION GENERATOR SHALL BE SIZED FOR A MINIMUM OF 360 MILLION IONS PER CC

GENERAL NOTES

1. DO NOT SCALE DRAWINGS. ROUGH FROM ARCHITECTURAL AND EQUIPMENT MANUFACTURER'S DRAWINGS.
2. DIMENSIONS ARE IN INCHES UNLESS OTHERWISE NOTED. DUCT SIZES SHOWN ON DRAWINGS ARE INTERIOR DIMENSIONS.
3. WHENEVER THE WORD "PROVIDE" IS USED IT SHALL MEAN FURNISH AND INSTALL COMPLETE AND READY FOR USE.
4. ELECTRICAL CHARACTERISTICS SHOWN ON SCHEDULES OR DRAWINGS ARE DESIGN VALUES ONLY AND SHALL BE VERIFIED BEFORE ORDERING EQUIPMENT.
5. PROVIDE GLASSFAB AND MASTIC ON ALL DUCT INSULATION, SEE SPECIFICATIONS. DUCT TAPE WILL NOT BE ACCEPTED.
6. CONDENSATE DRAIN LINES SHALL BE TYPE "L" COPPER WITH UNION CONNECTION. PROVIDE "P" TRAP FOR ALL CONDENSATE DRAINS. DRAIN LINES SHALL BE INSULATED WITHIN THE BUILDING ENVELOPE, SEE SPECS. DRAIN LINES SHALL BE FULL SIZE OF UNIT CONNECTION UNLESS OTHERWISE NOTED ON PLANS.
7. ROUTE CONDENSATE DRAIN LINE TO EXISTING MECHANICAL ROOM FLOOR DRAINS. SLOPE PIPING DOWN AND SECURE FROM FLOOR WITH STAND-OFF BRACKETS. ELBOW DOWN AT DRAIN.
8. BOLT UNITS TO CONCRETE PAD PER THE SEISMIC DETAILS PROVIDED BY THE DELEGATED SEISMIC DESIGN VENDOR.
9. CONSTRUCT DUCTWORK AS JOB PROGRESSES AND AFTER COORDINATING WITH ALL CONCERNED TRADES AND CONTRACTORS. SEE SPECIFICATIONS FOR FLEXIBLE DUCT REQUIREMENTS. CAREFUL ATTENTION SHALL BE TAKEN TO MAXIMIZE THE AVAILABLE SPACE WITHIN THE MECHANICAL ROOM. ROUTE DUCTS AS HIGH AS PRACTICAL AND MAINTAIN 7'-6" CLEAR HEAD ROOM IN ALL WALKING AREAS.
10. INSTALLATION OF EQUIPMENT, DUCTWORK, AND PIPING, INCLUDING VIBRATION ISOLATION SHALL COMPLY WITH 2021 INTERNATIONAL BUILDING CODE FOR SEISMIC PROTECTION. SEE SPECIFICATIONS.
11. MAINTAIN RECOMMENDED CLEARANCES AT EQUIPMENT AS REQUIRED BY THE MANUFACTURE FOR SERVICE. DO NOT BLOCK WITH PIPING OR DUCTWORK.
12. PROVIDE ACOUSTICAL DUCT LINER FOR ALL RETURN DUCT.
13. PROVIDE GALVANIZED SUPPORT HANGERS, BEAM CLAMPS, THREADED RODS, AND SUPPLEMENTAL STEEL.
14. ALL SUPPLEMENTAL STEEL AND HANGERS REQUIRED FOR THIS PROJECT SHALL BE PROVIDED BY THE CONTRACTOR UNLESS SHOWN OTHERWISE IN BID DOCUMENTS.
15. PROVIDE NEW CONTROLS AND ROOM SENSORS. LOCATE ROOM SENSORS IN EXISTING LOCATIONS.

SYMBOLS

- FLEXIBLE DUCT (6 FT. MAX. LENGTH)
- RIGID ROUND RUNOUT DUCT
- NEW MATERIAL
- MATERIAL TO BE REMOVED
- ACOUSTICALLY LINED DUCT
- CFM — AIR FLOWRATE, CUBIC FEET PER MINUTE
- (1) 100 — GRILLE OR DIFFUSER MARK, BALANCING CFM
- TURNING VANE
- SPLIT DUCT WITH SPLITTER DAMPER
- SPIN-IN TAKEOFF WITH SCOOP AND DAMPER
- MANUAL DAMPER WITH LOCKING QUADRANT
- FLEXIBLE CONNECTION
- MOTOR OPERATED DAMPER, SEE SPECS.
- T O H CO2 — THERMOSTAT/OVERRIDE/HUMIDISTAT/CO2
- S DS TS — SWITCHING DEVICE - WALL/DOOR/TIMER SWITCH
- FS E — PULL STATION / EMERGENCY STOP BUTTON
- SD — SMOKE DETECTOR
- FD — FIRE DAMPER
- SD — SMOKE DAMPER
- FSD — COMBINATION FIRE/SMOKE DAMPER
- AMS — AIR MONITORING STATION
- MD-100 — MAN. DPR. W/ LOCKING QUAD.-BALANCING CFM
- AS — AIR SEPARATOR
- D — CONDENSATE DRAIN LINE (INSULATED)
- R — REFRIGERANT PIPING
- ECWS — EXISTING CONDENSER WATER SUPPLY
- ECWR — EXISTING CONDENSER WATER RETURN
- CWR — CONDENSER WATER SUPPLY
- CWS — CONDENSER WATER RETURN
- NG — NATURAL GAS PIPING
- PIPE TURNING DOWN
- PIPE TURNING UP
- VALVE IN PIPE DROP OR RISER
- BALL VALVE (2" & SMALLER) BUTTERFLY VALVE (2-1/2" & LARGER)
- CHECK VALVE
- STRAINER
- RELIEF VALVE
- UNDERCUT DOOR
- DG — DOOR GRILLE, SEE ARCHITECTURAL
- CONNECT NEW TO EXISTING

PUMP SCHEDULE (1)

MARK	B & G MODEL (2)	GPM	HEAD	RPM	MIN. EFF.	MOTOR H.P. (3)	SERVICE	CONTROL
CHP-1	e1510 (4)	150	80'	1,800	72%	7.5	CH WATER LOOP	PRIMARY/STANDBY
CHP-2	e1510 (4)	150	80'	1,800	72%	7.5	CH WATER LOOP	PRIMARY/STANDBY

(1) PUMP TO MATCH AVAILABLE ELECTRICAL SERVICE, SEE ELECTRICAL.

(2) OR EQUAL BY TACO, ARMSTRONG, GRUNDFOS OR APPROVED EQUAL, SEE SPECIFICATIONS.

(3) BRAKE HORSEPOWER SHALL NOT EXCEED 85% OF MOTOR HORSEPOWER.

(4) VFD BY CONTROLS VENDOR, PROVIDE VFD RATED MOTOR WITH SHAFT GROUNDING.

ISSUE NO.	REMARKS:	BY	APPROV'D	DATE:
–	OWNER REVIEW	JJV	JJV	09.04.26
–	OSE REVIEW	JJV	JJV	09.14.26

South Carolina DEPARTMENT OF JUVENILE JUSTICE

A/E SEAL: SOUTH CAROLINA PROFESSIONAL ENGINEER No. 32435 09.14.26

FIRM SEAL: SOUTH CAROLINA CERTIFICATE OF AUTHORIZATION MECHANICAL DESIGN, INC. Columbia, SC No. C00096

MECHANICAL DESIGN INC.
4403 Broad River Road
Columbia, SC 29210
(803) 731-9834
(803) 731-9837 FAX
CONTACT: JUSTIN VARCO COMM. NO. 2641171.A

Project:
SCDJJ - CEC AIR HANDLER REPLACEMENT
RIDGEVILLE, SOUTH CAROLINA
N12-9640-AT-A

Sheet Title:
HVAC SYMBOLS, NOTES & SCHEDULES

SHEET NO.
M301

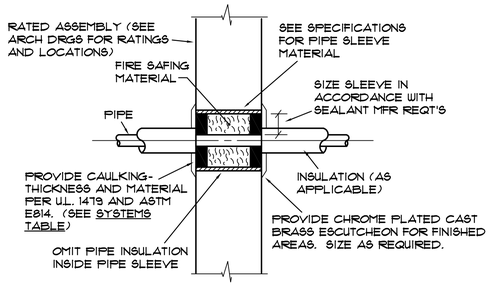

SYSTEMS TABLE				
MFR	RATING	U.L. SYSTEM NO.	RATING	U.L. SYSTEM NO.
GE PENSIL 100/200/500	3 HR	CAJ1045, CAJ2006 CAJ1030	2 HR	CAJ2023, WL2019
METACAULK 835/880/850	3 HR	CAJ1137, CAJ1136, CAJ2047, CAJ2048, CAJ2049, CAJ2050, CAJ2051, CAJ2052, CAJ2053, CAJ2053, CAJ1076, CAJ1037, CAJ1114, CAJ1038, CAJ1051, CAJ5011, CAJ5010	2 HR	WJ1007, WL1013, WJ2005, WL2014, CAJ2015, WJ2008, WL2016, WJ1013, WL1016, WJ2006, WL2015, WAJ2021, CAJ1036, CAJ3027
HILTI CS1240	3 HR	CAJ1037	2 HR	CAJ1130, CAJ1131, CAJ1134, WL1043, WL1034, WL1035, WL3038, WL3039, WL1042, WL2043, CAJ1138, WL2040, WL2041

NOTE:
CONTRACTOR SHALL REFER TO ARCH SHTS CS1.02 AND CS1.03 FOR LOCATIONS OF ALL RATED WALLS AND ASSEMBLIES. COORDINATE INSTALLATION OF WALL PENETRATION MATERIALS ACCORDINGLY.

PIPE THRU RATED ASSEMBLY DETAIL

NOT TO SCALE

NOTE:
CONTRACTOR SHALL SUBMIT DETAILED SHOP DRAWINGS/DATA SHEETS FOR U.L. RATED PIPE PENETRATIONS FOR REVIEW. FAILURE TO COMPLY PRIOR TO INSTALLATION OF CAULKING MATERIALS SHALL REQUIRE THE REMOVAL AND REPLACEMENT OF MATERIALS WITH SPECIFIED PRODUCTS.

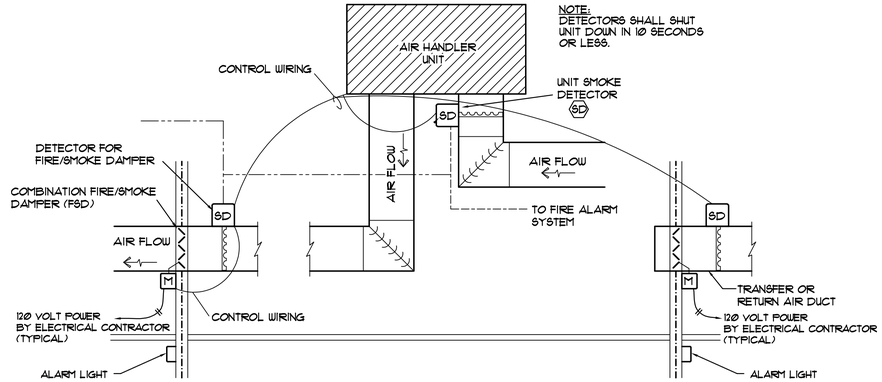

NOTE:
UNIT SMOKE DETECTORS, DETECTORS FOR COMBINATION FIRE/SMOKE DAMPERS (INCLUDING TRANSFER) AND POWER WIRING FOR MOTOR OPERATED DAMPERS SHALL BE PROVIDED BY ELECTRICAL CONTRACTOR. CONNECTION TO FIRE ALARM SYSTEM SHALL BE PROVIDED AND INSTALLED BY ELECTRICAL CONTRACTOR. INSTALLATION OF DETECTORS ,CONTROL AND INTERLOCK WIRING AND DAMPERS SHALL BE PROVIDED BY MECHANICAL CONTRACTOR. ALARM LIGHT AND CONTROL WIRING SHALL BE PROVIDE AND INSTALLED BY MECHANICAL CONTRACTOR. COORDINATE WITH THE FIRE ALARM SUPPLIER LOCATION AND QUANTITY OF DETECTORS REQUIRED. ELECTRICAL CONTRACTOR SHALL PROVIDE 120 VOLT WIRING FROM NEAREST AVAILABLE UNSWITCHED CIRCUIT TO DAMPER MOTOR.

HVAC AUTOMATIC FAN SHUTDOWN

NOT TO SCALE

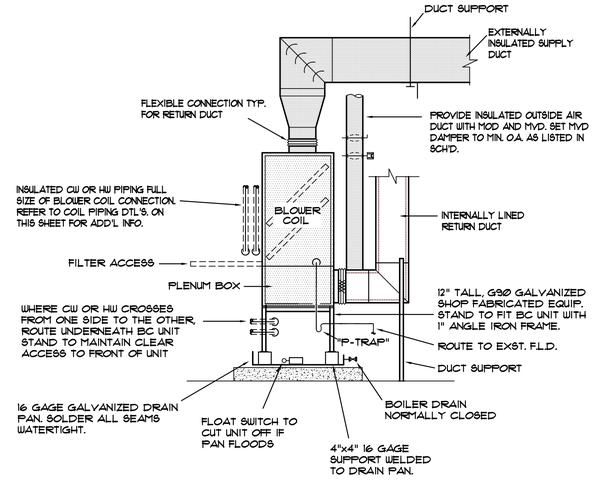

BLOWER COIL INSTALLATION DETAIL

NOT TO SCALE

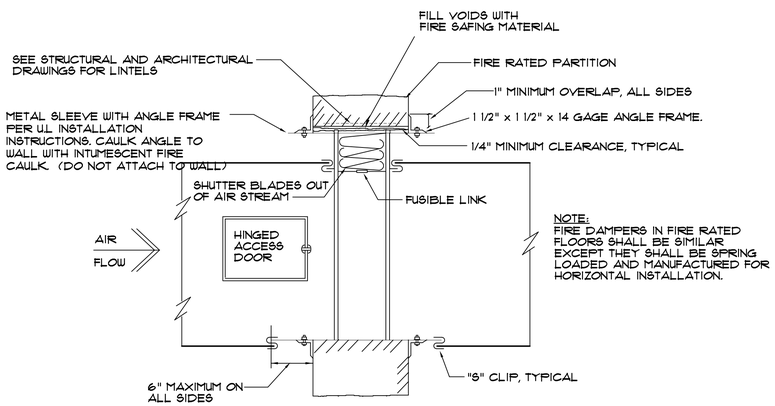

FIRE DAMPER DETAIL

NOT TO SCALE

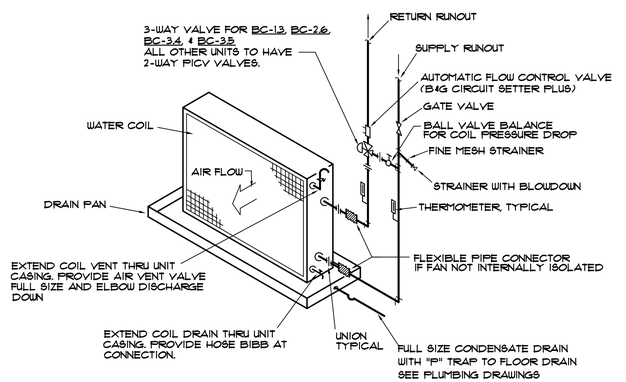

CHILLED WATER COIL PIPING DIAGRAM

NOT TO SCALE

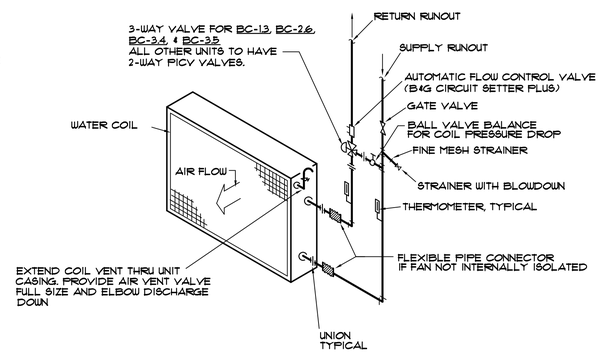

HOT WATER COIL PIPING DIAGRAM

NOT TO SCALE

ISSUE				
NO.	REMARKS:	BY	APPROV'D	DATE:
–	OWNER REVIEW	JJV	JJV	09.04.26
–	OSE REVIEW	JJV	JJV	09.14.26

South Carolina DEPARTMENT OF JUVENILE JUSTICE

A/E SEAL: SOUTH CAROLINA PROFESSIONAL ENGINEER JUSTIN J. VARCO No. 32435 09/14/26

FIRM SEAL: SOUTH CAROLINA MECHANICAL DESIGN, INC. Columbia, SC No. C00096 CERTIFICATE OF AUTHORIZATION

MECHANICAL DESIGN INC.
4403 Broad River Road
Columbia, SC 29210
(803) 731-9834
(803) 731-9837 FAX
CONTACT: JUSTIN VARCO
COMM. NO. 264171.A

Project:
SCDJJ - CEC AIR HANDLER REPLACEMENT
RIDGEVILLE, SOUTH CAROLINA
N12-9640-AT-A

Sheet Title:
HVAC DETAILS

SHEET NO.
M401

THIS DRAWING IS THE PROPERTY OF MECHANICAL DESIGN, INC. AND SUBJECT TO RETURN UPON REQUEST. IT IS NOT TO BE COPIED OR REPRODUCED, NOR IS IT TO BE USED FOR ANY PURPOSE OTHER THAN THAT FOR WHICH IT WAS FURNISHED, WITHOUT THE WRITTEN CONSENT OF MECHANICAL DESIGN, INC.

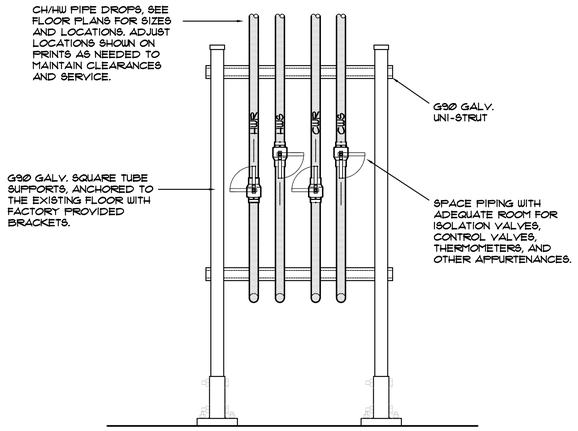

PIPE DROP SUPPORTS

NOT TO SCALE

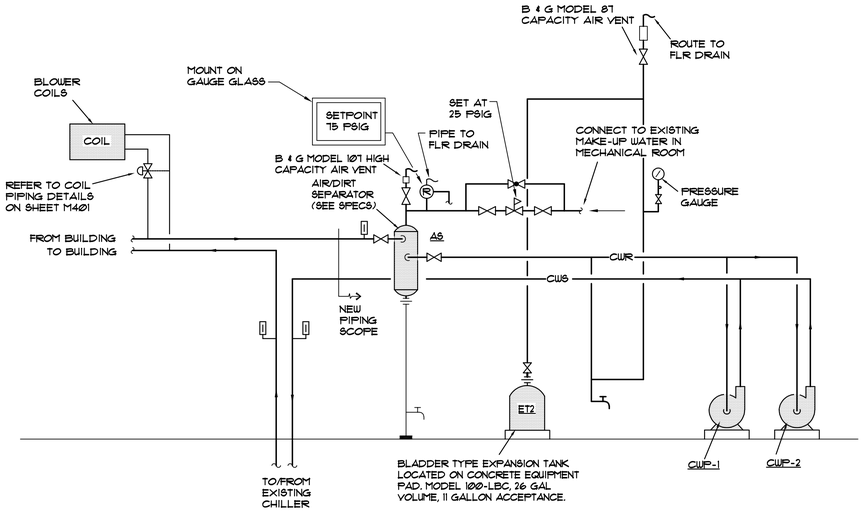

LOOP WATER PIPING SCHEMATIC

NOT TO SCALE

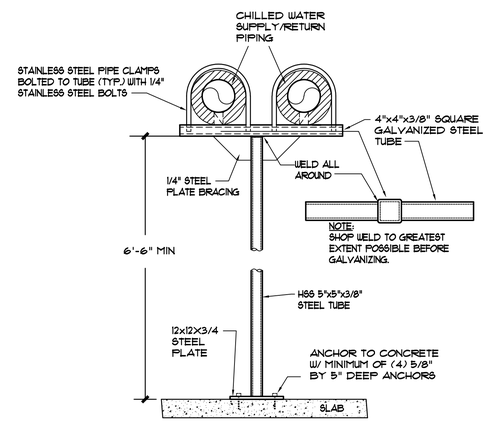

WATER PIPE SUPPORT DETAIL

NOT TO SCALE

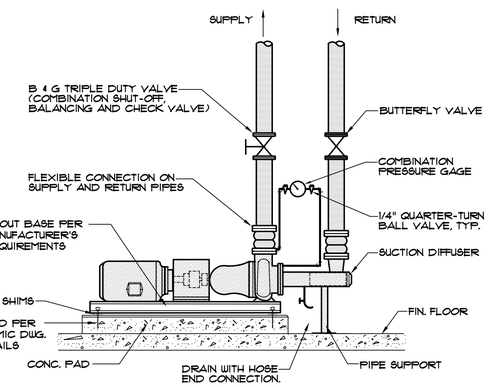

WATER PUMP SCHEDULE

NOT TO SCALE

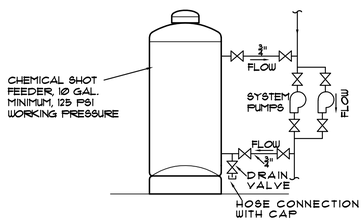

SHOT FEEDER DETAIL

NOT TO SCALE

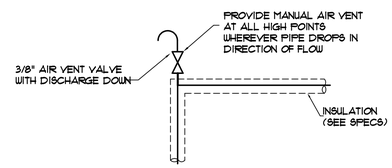

MANUAL AIR VENT

NOT TO SCALE

ISSUE:			
NO:	REMARKS:	BY	APPROV'D	DATE:
–	OWNER REVIEW	JJV	JJV	09.04.26
–	OSE REVIEW	JJV	JJV	09.14.26

South Carolina DEPARTMENT OF JUVENILE JUSTICE

A/E SEAL: SOUTH CAROLINA PROFESSIONAL ENGINEER LICENSE No. 32435 JUSTIN J. VARCO 09/14/26

FIRM SEAL: SOUTH CAROLINA MECHANICAL DESIGN, INC. Columbia, SC No. C00096 CERTIFICATE OF AUTHORIZATION

MECHANICAL DESIGN INC.
4403 Broad River Road
Columbia, SC 29210
(803) 731-9834
(803) 731-9837 FAX
CONTACT: JUSTIN VARCO
COMM. NO. 264171.A

Project: SCDJJ - CEC AIR HANDLER REPLACEMENT
RIDGEVILLE, SOUTH CAROLINA
N12-36400-AT-A

Sheet Title: HVAC DETAILS

SHEET NO. M402

THIS DRAWING IS THE PROPERTY OF MECHANICAL DESIGN, INC. AND SUBJECT TO RETURN UPON REQUEST. IT IS NOT TO BE COPIED OR REPRODUCED, NOR IS IT TO BE USED FOR ANY PURPOSE OTHER THAN THAT FOR WHICH IT WAS FURNISHED, WITHOUT THE WRITTEN CONSENT OF MECHANICAL DESIGN, INC.

GENERAL "ELECTRICAL" NOTES

1 BRANCH CIRCUIT WIRING SHALL BE NO. 12 AWG UNLESS NOTED OTHERWISE. WHERE CONDUCTOR AND RACEWAY SIZE ARE SHOWN AT HOMERUN, SUCH SIZE SHALL BE USED FOR THE ENTIRE CIRCUIT. EXCEPTION: FINAL CONNECTION TO DEVICES, IN OUTLET BOXES, IS NOT REQUIRED TO BE LARGER THAN NO. 12 AWG.

2 20A/120V BRANCH CIRCUITS EXCEEDING 100' IN LENGTH FROM PANEL TO FARTHEST DEVICE OR FIXTURE SHALL USE NO. 10 CONDUCTORS AND 3/4"C.

3 FEEDER CONDUITS, BRANCH CIRCUITS AND CABLE TRAY ROUTING SHALL COMPLY WITH DETAILS ON DRAWINGS AND SHALL BE COORDINATED WITH THE WORK OF OTHER TRADES BEFORE AND DURING CONSTRUCTION.

4 REFER TO THE ARCHITECTURAL DRAWINGS FOR PROJECT PHASING.

5 THE ARRANGEMENT, GROUPING, AND ROUTING OF BRANCH CIRCUITS SHALL BE PROVIDED AT THE CONTRACTOR'S DISCRETION IN ACCORDANCE WITH GENERALLY ACCEPTED PRACTICE FOR ELECTRICAL WORK, THE NATIONAL ELECTRICAL CODE REQUIREMENTS, LOCAL ORDINANCES, AND THE FOLLOWING:

6.1 A COMMON NEUTRAL SHALL NOT BE INSTALLED IN A HOMERUN FOR 2 OR 3 BRANCH CIRCUITS UNLESS DIRECTION IS PROVIDED BY THE ENGINEER IN WRITTING FOR A SPECIFIC APPLICATION.

6.2 MULTIPLE SINGLE-POLE BRANCH CIRCUITS (UP TO 3 HOTS, 3 NEUTRALS, 1 GROUND) RATED FOR 30-AMPS OR LESS MAY BE PULLED INTO A SINGLE RACEWAY. THE CONTRACTOR SHALL BE RESPONSIBLE FOR SIZING THE RACEWAYS AND DERATING CONDUCTORS PER NEC ARTICLE 310.15.

6.3 BRANCH CIRCUIT, FEEDER & COMMUNICATION CIRCUITS SHALL BE ROUTED OVERHEAD UNLESS PRIOR APPROVAL HAS BEEN GRANTED BY THE ARCHITECT AND ENGINEER.

6.4 A GROUND CONDUCTOR SHALL BE PROVIDED IN ALL RACEWAYS UNLESS NOTED OTHERWISE.

7 THE USE OF MC CABLE IS NOT ALLOWED.

8 SEAL ALL EXISTING AND NEW FIRE RATED WALL AND FLOOR PENETRATIONS IN THE CONSTRUCTION AREA.

9 SEE THE ARCHITECTURAL DRAWINGS FOR ALL LOCATIONS OF FIRE RATED WALLS.

10 WHEREVER ON THE ELECTRICAL DRAWINGS THE WORD "PROVIDE" IS USED, IT SHALL BE INFERRED TO MEAN "FURNISH AND INSTALL".

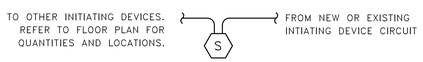

FLOOR

EXISTING FIRE ALARM SYSTEM NOTES

1. ALL FIRE ALARM WORK SHALL BE PROVIDED BY A FIRE ALARM CONTRACTOR CERTIFIED BY MANUFACTURER TO WORK ON THE SYSTEM.
2. EXISTING BUILDING FIRE ALARM SYSTEM IS BASED ON SIMPLEX. PROVIDE ADDITIONAL POWER SUPPLIES AND OTHER SYSTEM ACCESSORIES REQUIRED TO SUPPORT ADDITIONAL DEVICES.
3. INITIATING DEVICES SHALL BE SMOKE DETECTORS, DUCT-MOUNTED SMOKE DETECTORS, HEAT DETECTORS, MANUAL PULL STATIONS / ABORT STATIONS, AND WATER FLOW SWITCHES.
4. PROVIDE ALL DUCT SMOKE DETECTORS AND ACCESSORIES NECESSARY FOR INTERLOCKING WITH MECHANICAL EQUIPMENT (AHU'S, SMOKE DAMPERS, ETC). COORDINATE WITH MECHANICAL PLANS FOR LOCATIONS AND REQUIREMENTS. DETECTORS SHALL BE FURNISHED BY ELECTRICAL CONTRACTOR, INSTALLED BY MECHANICAL CONTRACTOR, WIRED TO FIRE ALARM SYSTEM BY ELECTRICAL CONTRACTOR, AND TIED TO MECHANICAL CONTROLS FOR AHU SHUTDOWN BY MECHANICAL CONTRACTOR.
5. ALL SYSTEM WIRING SHALL BE CLASS B, NO T-TAPPING IS PERMITTED.
6. ALL FIRE ALARM SYSTEM CABLING SHALL BE IN RED CONDUIT.
7. SEQUENCE OF OPERATION SHALL BE BASED ON EXISTING SYSTEM PROGRAMMING. THIS SCOPE OF WORK WILL NOT REQUIRE ANY MODIFICATIONS.

ELECTRICAL SYMBOL LEGEND

SYMBOL	DESCRIPTION	SYMBOL	DESCRIPTION
	DUPLEX RECEPTACLE (WALL MOUNTED @ 18"AFF)	F	FIRE ALARM PULL STATION (WALL MOUNTED @ 48" AFF TOP OF BOX)
	DUPLEX RECEPTACLE (GFI TYPE @ 18"AFF)	A/V	FIRE ALARM AUDIBLE/VISUAL DEVICE (WALL MOUNTED @ 7'-6" AFF)
J	JUNCTION BOX (WALL MTD)	A/V	FIRE ALARM AUDIBLE/VISUAL DEVICE (CEILING MOUNTED)
$M	MOTOR RATED SNAP SWITCH IN NEMA 1 ENCLOSURE	S	SMOKE DETECTOR (WALL MOUNTED)
FSD	FIRE / SMOKE DAMPER	S	SMOKE DETECTOR (CEILING MOUNTED)
	PANELBOARD (SURFACE MOUNTED)	D	SMOKE DETECTOR (DUCT MOUNTED)
	PANELBOARD (RECESS MOUNTED)	H	HEAT DETECTOR (WALL MOUNTED)
	CONTROL PANEL (SURFACE MOUNTED)	H	HEAT DETECTOR (CEILING MOUNTED)
	DISCONNECT SWITCH, (REFER TO EQUIPMENT CONNECTION SCHEDULE)	T	REMOTE TEST STATION FOR DUCT MOUNTED DETECTORS (WALL MOUNTED)
	MOTOR CONNECTION (AS NOTED)	T	REMOTE TEST STATION FOR DUCT MOUNTED DETECTORS (CEILING MOUNTED)
#	KEY NOTE CALLOUT (REFER TO KEY NOTES ON SHEET)	T	FIRE ALARM TAMPER SWITCH
		F	FIRE ALARM FLOW SWITCH

GENERAL "DEMOLITION" NOTES

1 ALL ELECTRICAL EQUIPMENT TO BE REMOVED SHALL REMAIN THE PROPERTY OF THE OWNER. THE CONTRACTOR SHALL NOT DISPOSE OF ANY MATERIALS UNTIL RELEASED BY OWNER'S PROJECT MANAGER. MATERIALS THAT OWNER'S PROJECT MANAGER CHOOSES TO RETAIN SHALL BE DELIVERED BY THE CONTRACTOR TO A LOCATION DESIGNATED BY THE PROJECT MANAGER. ALL OTHER MATERIALS SHALL BE PROPERLY DISPOSED OF BY THE CONTRACTOR.

2 REMOVE ALL EXPOSED ABANDONED COMMUNICATION CABLE FOUND DURING THE CONSTRUCTION PROCESS. SUPPORT ALL EXISTING REMAINING CABLE PER THE NEC.

3 ELECTRICAL DEVICES NOT SHOWN ON WALLS TO BE DEMOLISHED SHALL BE DEMOLISHED AT NO ADDITIONAL COST TO OWNER.

4 ELECTRICAL DEVICES NOT SHOWN ON CEILINGS OR WALLS TO REMAIN SHALL REMAIN IN PLACE. PROTECT FROM DAMAGE DURING CONSTRUCTION

5 ELECTRICAL DEVICES NOT SHOWN ON CEILINGS TO BE REMOVED SHALL BE TEMPORARILY DISCONNECTED AND REMOVED DURING DEMOLITION AND RE-INSTALLED ON NEW CEILING IN SAME LOCATION.

GENERAL EXISTING CONDITION NOTES

1 AREAS OF WORK EXIST FOR THIS PROJECT WHICH ARE NOT ACCESSIBLE OR HAVE LIMITED ACCESS DURING DESIGN. AS SUCH CONTRACTOR SHALL VERIFY ALL UTILITIES IN AREA OF WORK BEFORE DEMOLITION OF ANY SERVICE. ANY ELECTRICAL COMPONENTS NOT SHOWN SHALL BE IDENTIFIED AND THE ARCHITECT AND ENGINEER SHALL BE NOTIFIED AS SOON AS POSSIBLE. NO ELECTRICAL REWORK SHALL BE COMMENCED WITHOUT COORDINATION OF BOTH ARCHITECT AND ENGINEER.

2 IN AREAS WHERE THE EXISTING CEILINGS ARE NOT SLATED TO BE REMOVED, THE CONTRACTOR SHALL WORK THRU THE EXISTING CEILINGS (SEE ARCHITECTURAL REFLECTED CEILING PLAN FOR AREA OF WORK). THE CONTRACTOR SHALL BE RESPONSIBLE FOR REPLACING ANY DAMAGED TILE OR GRID THAT IS A RESULT OF THEIR WORK.

3 REFER TO ARCHITECTURAL PLANS FOR PHASING OF CONSTRUCTION.

4 THE CONTRACTOR SHALL BE RESPONSIBLE FOR INSTALLING A FIRESTOP SYSTEM IN ALL PENETRATIONS OF FIRE-RATED WALLS CREATED BY THE REMOVAL OF EXISTING ELECTRICAL CONDUIT OR CABLES, AS WELL AS THOSE CREATED BY NEWLY INSTALLED CONDUITS AND SLEEVES.

5 WHERE INSTALLATION REQUIRES CUTTING OR DRILLING OF THE EXISTING FLOOR SLAB, THE CONTRACTOR SHALL X-RAY THE EXISTING SLAB PRIOR TO WORK TO ENSURE THAT NO EXISTING UTILITIES OR STRUCTURAL ELEMENTS IN THE SLAB WILL BE COMPROMISED BY THE WORK. NOTIFY THE ARCHITECT/ENGINEER OF ANY CONFLICTS THAT WILL REQUIRE RELOCATING THE PROPOSED SLAB WORK. THE CONTRACTOR SHALL BE RESPONSIBLE FOR THE REPAIR OF ANY DAMAGED UTILITIES OR STRUCTURAL ELEMENTS CAUSED BY THE SLAB DEMOLITION.

6 SUPPORT ALL EXISTING CONDUITS AND JUNCTION BOXES ABOVE THE CEILING PER NEC IN THE CONSTRUCTION AREA.

7 REMOVE ALL ABANDONED CONDUIT, WIRE, AND COMMUNICATION CABLES ABOVE THE CEILING IN THE CONSTRUCTION AREA.

8 PROVIDE JUNCTION BOX COVER PLATES ON ALL EXISTING JUNCTION BOXES ABOVE THE CEILING IN THE CONSTRUCTION AREA.

9 SUPPORT ALL EXISTING COMMUNICATION CABLES ABOVE THE CEILING IN THE CONSTRUCTION AREA.

10 WHERE INFORMATION SHOWN ON THESE DRAWINGS CONFLICTS WITH VERIFIED FIELD CONDITIONS, IT SHALL BE BROUGHT TO THE ATTENTION OF THE ENGINEER.

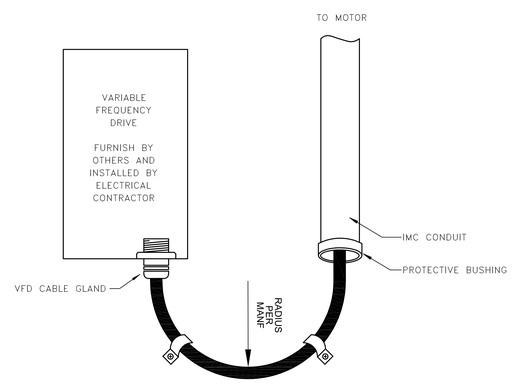

VFD CABLE DETAIL

SCALE: N.T.S.

GENERAL "POWER" NOTES

1 PROVIDE AND INSTALL AN ENGRAVED LAMINATED PLASTIC NAMEPLATE ON EACH ITEM OF ELECTRICAL EQUIPMENT SERVING MECHANICAL EQUIPMENT WHICH MATCH MECHANICAL DESCIPTIONS, TO INDICATE THE DESIGNATION OF THE UNIT ON THE PLANS & THE BRANCH CIRCUIT SERVING THE EQUIPMENT.

2 WHERE SPEED CONTROLLER IS INDICATED TO BE PROVIDED WITH FANS, IT SHALL BE PROVIDED BY MECHANICAL CONTRACTOR AND INSTALLED BY ELECTRICAL CONTRACTOR.

ABBREVIATIONS

ABR	DESCRIPTION
(E)	EXISTING
AFC	ABOVE FINISHED CEILING
AFF	ABOVE FINISHED FLOOR
AFG	ABOVE FINISHED GRADE
AHU	AIR HANDLING UNIT
BAS	BUILDING AUTOMATION SYSTEM
BFC	BELOW FINISHED CEILING
BFG	BELOW FINISHED GRADE
BOD	BOTTOM OF DEVICE
CBB	COMMUNICATIONS BACK BOARD
cd	CANDELA
CLG	CEILING
ECB	ENCLOSED CIRCUIT BREAKER
EF	EXHAUST FAN
FCU	FAN COIL UNIT
FDS	FUSED DISCONNECT SWITCH
FSD	FIRE/SMOKE DAMPER
GFCI	GROUND-FAULT CIRCUIT-INTERRUPTING
GFI	GROUND-FAULT INTERRUPTING
GP	GENERAL PURPOSE
HP	HEAT PUMP
IG	ISOLATED GROUND
J-BOX	JUNCTION BOX
NEC	NATIONAL ELECTRIC CODE
NFDS	NON-FUSED DISCONNECT SWITCH
UNO	UNLESS OTHERWISE NOTED
VFD	VARIABLE FREQUENCY DRIVE
W/	WITH
WH	WATER HEATER
WP	WEATHERPROOF
XFMR	TRANSFORMER

ELECTRICAL DRAWING INDEX

#	SHEET NAME
E001	ELECTRICAL NOTES & LEGENDS
E101	ELECTRICAL DEMOLITION FLOOR PLANS
E102	ELECTRICAL RENOVATION FLOOR PLANS
E201	ELECTRICAL SCHEDULES

Kimley»Horn
2519A PLATT SPRINGS RD
WEST COLUMBIA
SC 29169
PHONE: 803.731.0650

ISSUE NO.	REMARKS:	BY	APPROV'D	DATE:
-	OWNER REVIEW	IMC	JLA	09.04.26
-	OSE REVIEW	IMC	JLA	09.14.26

South Carolina DEPARTMENT OF JUVENILE JUSTICE

A/E SEAL: 9/14/26

FIRM SEAL:

MECHANICAL DESIGN INC.
4403 Broad River Road
Columbia, S.C. 29210
(803) 731-9800
(803) 731-9837 FAX
CONTACT: JUSTIN VARCO COMM NO. 264171.A

Project:
SCDJJ - CEC AIR HANDLER REPLACEMENT
RIDGEVILLE, SOUTH CAROLINA
N12-9640-AT-A

Sheet Title:
ELECTRICAL NOTES AND LEGENDS

SHEET NO.
E001

KEY NOTES

1. DISCONNECT, REMOVE AND REPLACE PANEL 'HEA'. RETAIN CONDUIT AND WIRE RUNS FOR REUSE IN NEW PANEL.
2. DISCONNECT AND REMOVE AHU-3 DISCONNECT SWITCH. RETAIN CONDUIT AND WIRE RUN BACK TO PANEL HEA FOR REUSE.
3. DISCONNECT EXISTING AND RECONNECT NEW CHILLED WATER PUMP IN THE SAME LOCATION. REUSE EXISTING CIRCUITING AND DISCONNECT SWITCH.
4. DISCONNECT AND REMOVE AHU-1 DISCONNECT SWITCH. RETAIN/EXTEND EXISTING CONDUIT. REMOVE EXISTING BRANCH CIRCUIT CONDUCTORS.

DEMOLITION/RENOVATION NOTATION

- * IF NO ANNOTATION IS SHOWN ASSUME EXISTING TO REMAIN IN PLACE FOR SOLID LINES AND DEMOLISH FOR DASHED LINES.
- * DEVICES AND EQUIPMENT NOT SHOWN SHALL BE ASSUMED TO BE EXISTING TO REMAIN IN PLACE.
- E EXISTING FIXTURE OR DEVICE TO REMAIN IN PLACE.
- R EXISTING FIXTURE OR DEVICE TO BE REMOVED BY THE ELECTRICAL CONTRACTOR. MAINTAIN CONTINUITY OF REMAINING PORTIONS OF BRANCH CIRCUIT.
- RE EXISTING DEVICE TO BE REMOVED BY THE ELECTRICAL CONTRACTOR. EXISTING CIRCUIT SHALL BE RETAINED. PROVIDE NEW DEVICE AS SHOWN ON RENOVATION PLANS.
- RN RELOCATED FIXTURE (NEW LOCATION).
- RR EXISTING FIXTURE TO BE RELOCATED BY THE ELECTRICAL CONTRACTOR TO NEW LOCATION SHOWN ON RENOVATION PLAN.

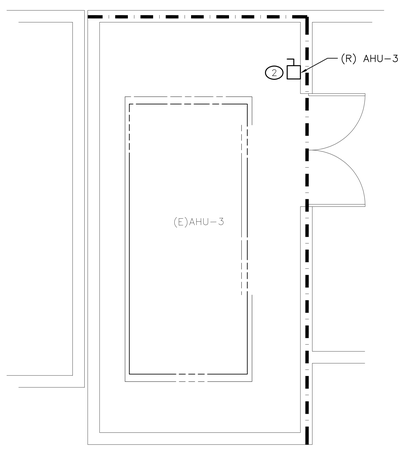

ELECTRICAL DEMO FLOOR PLAN – MECH B135

SCALE: 1/4" = 1'-0"

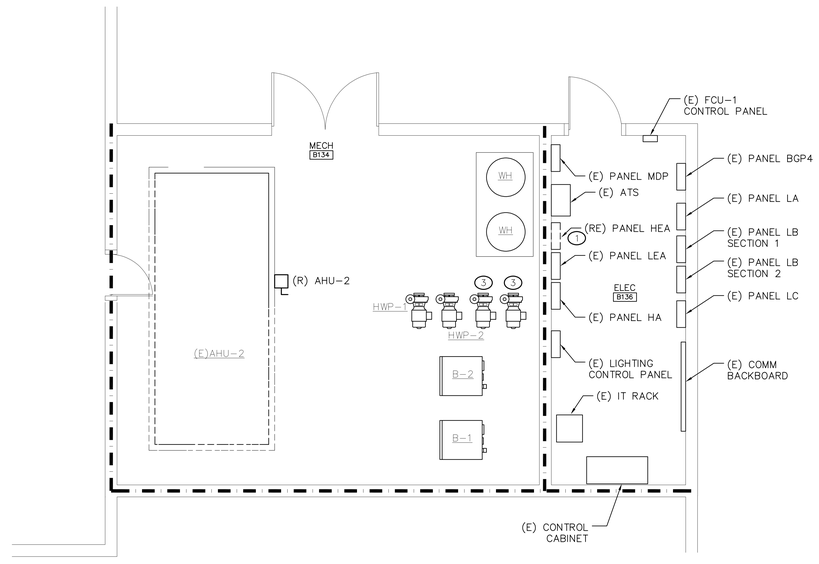

ELECTRICAL DEMO FLOOR PLAN – MECH B134

SCALE: 1/4" = 1'-0"

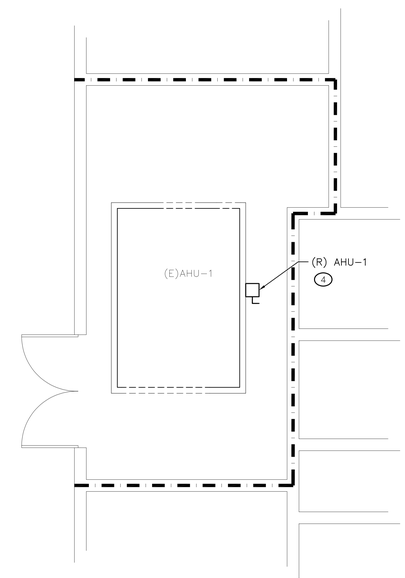

ELECTRICAL DEMO FLOOR PLAN – MECH A120

SCALE: 1/4" = 1'-0"

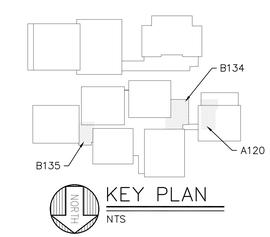

KEY PLAN

NTS

Kimley»Horn
2519A PLATT SPRINGS RD
WEST COLUMBIA
SC 29169
PHONE: 803.731.0650

ISSUE NO.	REMARKS:	BY	APPROV'D	DATE:
–	OWNER REVIEW	IMC	JLA	09.04.26
–	OSE REVIEW	IMC	JLA	09.14.26

South Carolina DEPARTMENT OF JUVENILE JUSTICE

A/E SEAL: 9/14/26

FIRM SEAL:

MECHANICAL DESIGN INC.
4400 Broad River Road
Columbia, S.C. 29210
(803) 731-9834
(803) 731-9837 FAX
CONTACT: JUSTIN VARCO
COMM. NO. 2641171.A

Project:
SCDJJ – CEC AIR HANDLER REPLACEMENT
RIDGEVILLE, SOUTH CAROLINA
N12-9640-AT-A

Sheet Title:
ELECTRICAL DEMOLITION FLOOR PLANS

SHEET NO.
E101

KEY NOTES

1. PROVIDE REPLACEMENT PANEL WITH 54 CIRCUIT SPACES. RECONNECT EXISTING CIRCUITS RETAINED FROM DEMOLITION.
2. REUSE EXISTING FEEDER FOR PANEL 'HEA2'.
3. RECONNECT CHILLED WATER PUMP TO EXISTING CIRCUIT RETAINED FROM DEMOLITION. WIRE THROUGH VFD (FURNISHED BY MECHANICAL) TO CHILLED WATER PUMPS.
4. EXTEND EXISTING CONDUIT FROM REMOVED AHU–1 TO PANEL LOCATION. PROVIDE FEEDER CONDUCTORS FROM PANEL 'HA'.

DEMOLITION/RENOVATION NOTATION

- * IF NO ANNOTATION IS SHOWN ASSUME EXISTING TO REMAIN IN PLACE FOR SOLID LINES AND DEMOLISH FOR DASHED LINES.
- * DEVICES AND EQUIPMENT NOT SHOWN SHALL BE ASSUMED TO BE EXISTING TO REMAIN IN PLACE.
- E EXISTING FIXTURE OR DEVICE TO REMAIN IN PLACE.
- R EXISTING FIXTURE OR DEVICE TO BE REMOVED BY THE ELECTRICAL CONTRACTOR. MAINTAIN CONTINUITY OF REMAINING PORTIONS OF BRANCH CIRCUIT.
- RE EXISTING DEVICE TO BE REMOVED BY THE ELECTRICAL CONTRACTOR. EXISTING CIRCUIT SHALL BE RETAINED. PROVIDE NEW DEVICE AS SHOWN ON RENOVATION PLANS.
- RN RELOCATED FIXTURE (NEW LOCATION).
- RR EXISTING FIXTURE TO BE RELOCATED BY THE ELECTRICAL CONTRACTOR TO NEW LOCATION SHOWN ON RENOVATION PLAN.

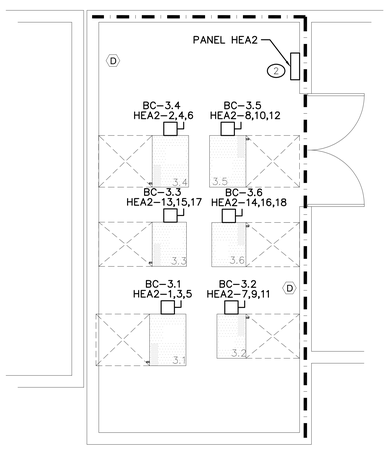

ELECTRICAL RENO FLOOR PLAN – MECH B135

SCALE: 1/4" = 1'–0"

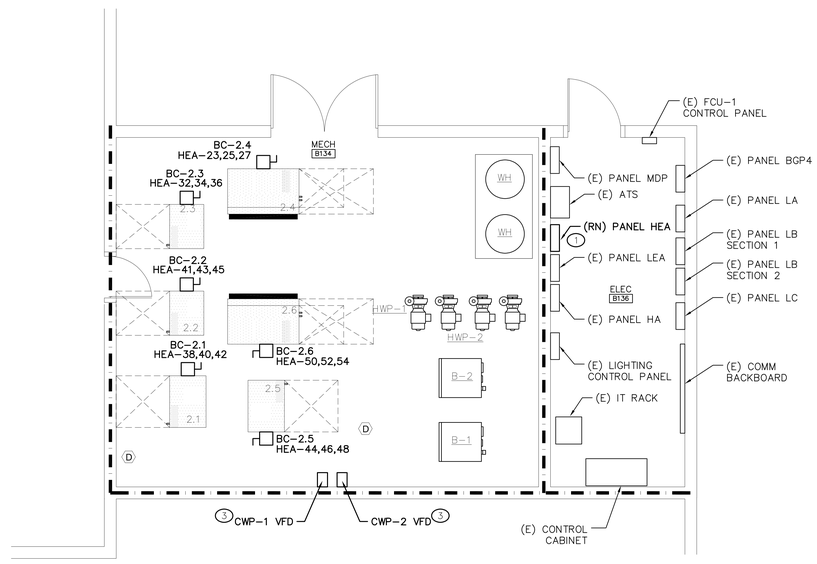

ELECTRICAL RENO FLOOR PLAN – MECH B134

SCALE: 1/4" = 1'–0"

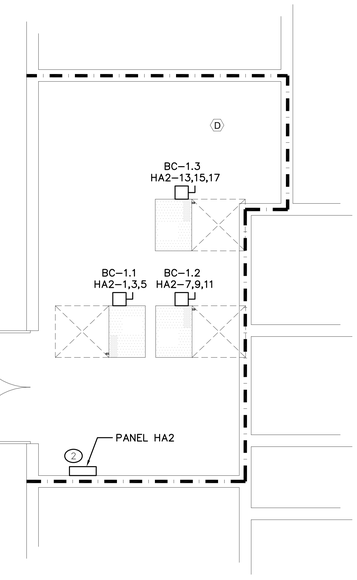

ELECTRICAL RENO FLOOR PLAN – MECH A120

SCALE: 1/4" = 1'–0"

KEY PLAN

NTS

Kimley»Horn
2519A PLATT SPRINGS RD
WEST COLUMBIA
SC 29169
PHONE: 803.731.0650

ISSUE NO.	REMARKS:	BY	APPROV'D	DATE:
–	OWNER REVIEW	IMC	JLA	09.04.26
–	OSE REVIEW	IMC	JLA	09.14.26

South Carolina DEPARTMENT OF JUVENILE JUSTICE

A/E SEAL: 9/14/26

FIRM SEAL:

MECHANICAL DESIGN INC.
4400 Broad River Road
Columbia, S.C. 29210
(803) 731–9834
(803) 731–9837 FAX
CONTACT: JUSTIN VARCO
COMM. NO. 264171.A

Project: SCDJJ – CEC AIR HANDLER REPLACEMENT
RIDGEVILLE, SOUTH CAROLINA
N12–9640–AT–A

Sheet Title: ELECTRICAL RENOVATION FLOOR PLANS

SHEET NO. E102

277/480V, 3 PH., 4W, 60 HZ
225 AMP M.L.O.
SURFACE MOUNTED
25,000 A.I.C. SYM. (MINIMUM)

REPLACEMENT PANEL "HEA"

LOADS SERVED	BKR. AMP	LOAD KVA	CKT. NO.	(S / N)	CKT. NO.	LOAD KVA	BKR. AMP	LOADS SERVED
EXISTING PANEL LEA	70	–	1		2	–	20	EXISTING LIGHTING LOAD
		–	3		4	–	20	EXISTING LIGHTING LOAD
		–	5		6	–	20	EXISTING EXTERIOR LTG LOAD
EXISTING EXTERIOR LTG LOAD	20	–	7		8	–		
EXISTING EXTERIOR LTG LOAD	20	–	9		10	–	15	EXISTING HWP–2
SPARE	20	–	11		12	–		
SPACE	–	–	13		14	–		
SPACE	–	–	15		16	–	15	EXISTING SEF–1, SEF–2, SEF–3
		–	17		18	–		
EXISTING BGP3	125	–	19		20	–		
		–	21		22	–	20	EXISTING HWP–3
		0.4	23		24	–		
BC–2.1	15	0.4	25		26	–		
		0.4	27		28	–	20	EXISTING HWP–4
		1.6	29		30	–		
PANEL HEA2	30	1.6	31		32	0.2		
		1.6	33		34	0.2	15	BC–2.3
		–	35		36	0.2		
EXISTING HWP–1	15	–	37		38	0.8		
		–	39		40	0.8	15	BC–2.4
		0.2	41		42	0.8		
BC–2.2	15	0.2	43		44	0.4		
		0.2	45		46	0.4	15	BC–2.5
SPACE	–	–	47		48	0.4		
SPACE	–	–	49		50	0.8		
SPACE	–	–	51		52	0.8	15	BC–2.6
SPACE	–	–	53		54	0.8		

CONNECTED LOADS (KVA)
øA 3.0 øB 3.0 øC 3.0

TOTAL LOADS (KVA)
9.0

GENERAL PANEL SCHEDULE NOTES

1 PROVIDE 4#12, #12G IN 3/4" CONDUIT FOR ALL NEW BRANCH CIRCUITS.

277/480V, 3 PH., 4W, 60 HZ
100 AMP M.L.O.
SURFACE MOUNTED
25,000 A.I.C. SYM. (MINIMUM)

PROVIDE PANEL "HEA2"

LOADS SERVED	BKR. AMP	LOAD KVA	CKT. NO.	(S / N)	CKT. NO.	LOAD KVA	BKR. AMP	LOADS SERVED
BC–3.1	15	0.2	1		2	0.4		
		0.2	3		4	0.4	15	BC–3.4
		0.2	5		6	0.4		
BC–3.2	15	0.2	7		8	0.4		
		0.2	9		10	0.4	15	BC–3.5
		0.2	11		12	0.4		
BC–3.3	15	0.2	13		14	0.2		
		0.2	15		16	0.2	15	BC–3.6
		0.2	17		18	0.2		

CONNECTED LOADS (KVA)
øA 1.6 øB 1.6 øC 1.6

TOTAL LOADS (KVA)
4.8

* PROVIDE LABEL INDICATING THAT PANEL IS FED FROM PANEL 'HEA' WITH A 30–AMP, 3–POLE BREAKER.

277/480V, 3 PH., 4W, 60 HZ
100 AMP M.L.O.
SURFACE MOUNTED
25,000 A.I.C. SYM. (MINIMUM)

PROVIDE PANEL "HA2"

LOADS SERVED	BKR. AMP	LOAD KVA	CKT. NO.	(S / N)	CKT. NO.	LOAD KVA	BKR. AMP	LOADS SERVED
BC–1.1	15	0.2	1		2	–		
		0.2	3		4	–	–	SPACE
		0.2	5		6	–		
BC–1.2	15	0.4	7		8	–		
		0.4	9		10	–	–	SPACE
		0.4	11		12	–		
BC–1.3	15	0.4	13		14	–		
		0.4	15		16	–	–	SPACE
		0.4	17		18	–		

CONNECTED LOADS (KVA)
øA 1.0 øB 1.0 øC 1.0

TOTAL LOADS (KVA)
3.0

* PROVIDE LABEL INDICATING THAT PANEL IS FED FROM PANEL 'HA' WITH A 30–AMP, 3–POLE BREAKER.

277/480V, 3 PH., 4W, 60 HZ
125 AMP M.L.O.
SURFACE MOUNTED
25,000 A.I.C. SYM. (MINIMUM)

EXISTING PANEL "HA"

LOADS SERVED	BKR. AMP	LOAD KVA	CKT. NO.	(S / N)	CKT. NO.	LOAD KVA	BKR. AMP	LOADS SERVED
EXISTING LIGHTING LOAD	20	0.0	1		2	0.0	20	EXISTING LIGHTING LOAD
EXISTING LIGHTING LOAD	20	0.0	3		4	–	20	SPARE
EXISTING LIGHTING LOAD	20	0.0	5		6	–	20	SPARE
EXISTING LIGHTING LOAD	20	0.0	7		8	0.0		
EXISTING LIGHTING LOAD	20	0.0	9		10	0.0	15	EXISTING CHP–2
EXISTING LV RELAY PANEL	20	0.0	11		12	0.0		
SPACE	–	–	13		14	0.0	20	EXISTING LIGHTING LOAD
SPACE	–	–	15		16	0.0	20	EXISTING LIGHTING LOAD
SPACE	–	–	17		18	1.0		
EXISTING EXTERIOR LTG LOAD	20	0.0	19		20	1.0	30	PANEL HA2
EXISTING EXTERIOR LTG LOAD	20	0.0	21		22	1.0		
EXISTING EXTERIOR LTG LOAD	20	0.0	23		24	–	–	SPACE
		0.0	25		26	–	20	SPARE
EXISTING CHP–1	15	0.0	27		28	0.0	20	EXISTING SITE LIGHTING LOAD
		0.0	29		30	0.0	30	EXISTING SITE LIGHTING LOAD
		–	31		32	–	–	SPACE
SPARE	20	–	33		34	–	–	SPACE
		–	35		36	–	–	SPACE
SPACE	–	–	37		38	–	–	SPACE
SPACE	–	–	39		40	–	–	SPACE
SPACE	–	–	41		42	–	–	SPACE

CONNECTED LOADS (KVA)
øA 1.0 øB 1.0 øC 1.0

TOTAL LOADS (KVA)
3.0

EQUIPMENT CONNECTION SCHEDULE									
		ELECTRICAL SUMMARY			DISCONNECT SUMMARY				
UNIT I.D.	CONNECTION DESCRIPTION	VOLTAGE	# OF POLES	LOAD (VA)	FURN. BY	DISC. TYPE	DISC. RATING	NEMA RATING	NOTES
BC–1.1	BLOWER COIL	277/480V	3	587VA	E	F	30A	1	
BC–1.2	BLOWER COIL	277/480V	3	1,127VA	E	F	30A	1	
BC–1.3	BLOWER COIL	277/480V	3	1,127VA	E	F	30A	1	
BC–2.1	BLOWER COIL	277/480V	3	1,127VA	E	F	30A	1	
BC–2.2	BLOWER COIL	277/480V	3	587VA	E	F	30A	1	
BC–2.3	BLOWER COIL	277/480V	3	587VA	E	F	30A	1	
BC–2.4	BLOWER COIL	277/480V	3	2,478VA	E	F	30A	1	
BC–2.5	BLOWER COIL	277/480V	3	1,127VA	E	F	30A	1	
BC–2.6	BLOWER COIL	277/480V	3	2,478VA	E	F	30A	1	
BC–3.1	BLOWER COIL	277/480V	3	587VA	E	F	30A	1	
BC–3.2	BLOWER COIL	277/480V	3	587VA	E	F	30A	1	
BC–3.3	BLOWER COIL	277/480V	3	587VA	E	F	30A	1	
BC–3.4	BLOWER COIL	277/480V	3	1,127VA	E	F	30A	1	
BC–3.5	BLOWER COIL	277/480V	3	1,127VA	E	F	30A	1	
BC–3.6	BLOWER COIL	277/480V	3	587VA	E	F	30A	1	

EQUIPMENT CONNECTION SCHEDULE NOTES

1 ALL SWITCHES SHALL BE HEAVY DUTY TYPE AT 480–VOLT AND GENERAL DUTY TYPE FOR 240–VOLT.
2 "M" DENOTES DISCONNECT SWITCH INTEGRAL WITH MECHANICAL EQUIPMENT. "E" DENOTES DISCONNECT IS FURNISHED AND INSTALLED BY ELECTRICAL CONTRACTOR.
3 FOR DISCONNECT TYPE: "F" DENOTES FUSIBLE TYPE, "NF" DENOTES NON–FUSIBLE TYPE, AND "MTR" DENOTES MOTOR RATED TOGGLE SWITCH WITH LOCK–OUT ACCESSORY.
4 PROVIDE FUSES PER EQUIPMENT MANUFACTURER'S NAMEPLATE INFORMATION / WRITTEN INSTRUCTIONS.

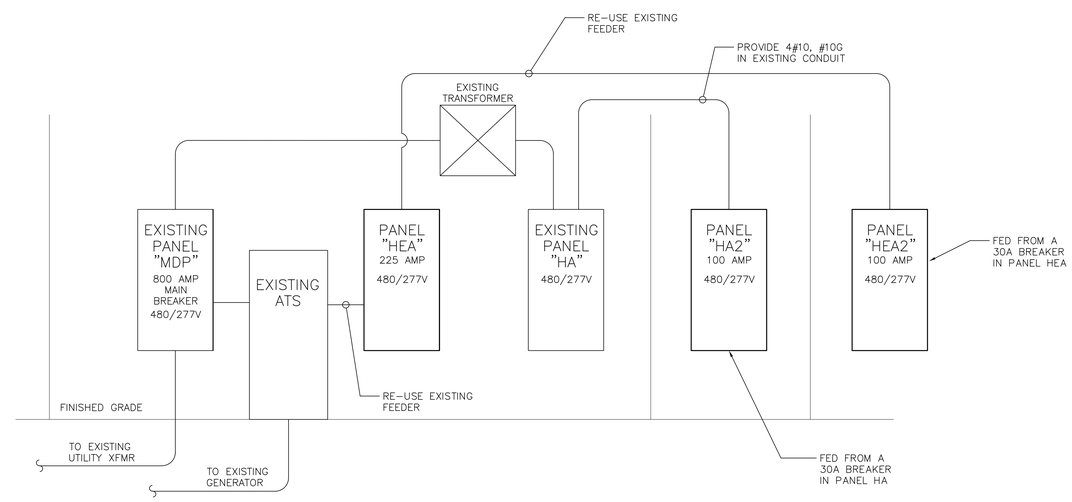

ELECTRICAL SINGLE LINE

SCALE: N.T.S.

Kimley»Horn
2519A PLATT SPRINGS RD
WEST COLUMBIA
SC 29169
PHONE: 803.731.0650

ISSUE				
NO.	REMARKS:	BY	APPROV'D	DATE:
–	OWNER REVIEW	IMC	JLA	09.04.26
–	OSE REVIEW	IMC	JLA	09.14.26

South Carolina DEPARTMENT OF JUVENILE JUSTICE

A/E SEAL: 9/14/26

FIRM SEAL:

MECHANICAL DESIGN INC.
4403 Broad River Road
Columbia, S.C. 29210
(803) 731–9834
(803) 731–9837 FAX
CONTACT: JUSTIN VARCO
COMM. NO. 264171.A

Project:
SCDJJ – CEC AIR HANDLER REPLACEMENT
RIDGEVILLE, SOUTH CAROLINA
N12–9640–AT–A

Sheet Title:
ELECTRICAL SCHEDULES

SHEET NO.
E201